SMITH® JAY R. SMITH MFG. CO.®
MEMBER OF MORRIS GROUP INTERNATIONAL
POST OFFICE BOX 3237
MONTGOMERY, ALABAMA 36109-0237 (USA)
TEL: 334-277-8520 FAX: 888-377-7818 www.jrsmith.com

CUSTOMER DRIVEN SINCE 1926

MEMBER OF:

LOCATION

BACKWATER VALVE

PIT STYLE BACKWATER VALVE

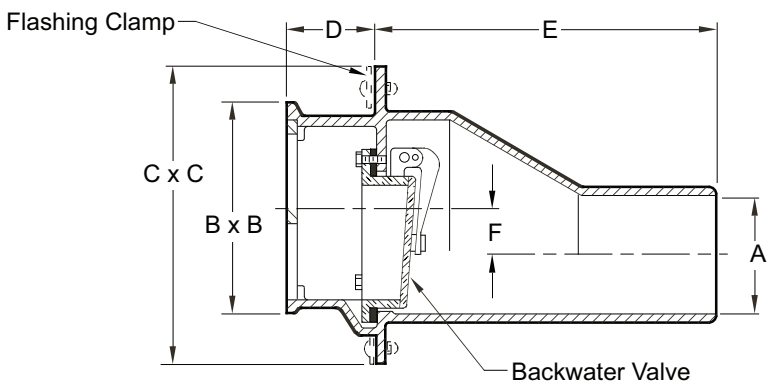

☐ Fig. 7000S .....SPIGOT OUTLET

A PIPE SIZE	B x B	C x C	D	E	F	Free Area SQ. IN. (SQ CM)
03 (75)	6 3/4(170) x 9 1/2(240)	10 1/4(260) x 12(305)	3 (76)	11 1/4 (285)	2 3/4 (70)	16 1/2 (106)
04 (100)	6 3/4(170) x 9 1/2(240)	10 1/4(260) x 12(305)	3 (76)	11 1/4 (285)	2 1/4 (57)	16 1/2 (106)
05 (125) & 06 (150)	7 3/4(195) x 11(280)	9 3/4(250) x 13(330)	4 (100)	13 1/4 (335)	1 1/4 (32)	24 1/2 (158)
08 (200)	12 1/2(330) x 14 1/2(370)	17 1/4(440) x 19(485)	4 (100)	22 (560)	4 3/4 (120)	56 (361)

NOTE: B.W.V. flapper set at factory to hang in closed position. Pin can be moved to permit flapper to hang open 1/4" (6) to permit air circulation.

NOTE: 2-4" size furnished with Delrin Backed Neoprene flapper. All other sizes furnished with bronze flapper.

REGULARLY FURNISHED:
Duco Cast Iron Body with Backwater Valve and Cast Iron Secured Grate.

Conforms to ASME A112.14.1

VARIATIONS:
- ☐ Flashing Clamp -C
- ☐ Less Backwater Valve -LBWV
- ☐ Service Weight Outlet -SW

OPTIONAL MATERIALS:
- ☐ Chrome Plated Face -CP
- ☐ Galvanized Cast Iron -G
- ☐ Nickel Bronze Face -NB
- ☐ Polished Bronze Face -PB
- ☐ Stainless Steel (Specify Fig. 9790)

NOTE: These valves offer protection against backwater surges. Backflow is prevented when valve is not obstructed by debris or sludge. Use for gravity flow only, not for pressurized applications.

NOTE: Dimensions shown in Parentheses are in millimeters.

REV.	DATE	DESCRIPTION	BY	CKD. BY
L	10-8-25	Removed * and Text	TB	CL
K	4-10-24	Added ASME Note	HS	CB
J	7-20-23	Removed Function	HS	CL
H	12-5-16	Added Note	TBW	BW

WEIGHT POUNDS

VOLUME CUBIC FEET

FIGURE NUMBER **7000**

DRAWING NUMBER S7000 | SIZE A | SCALE: NONE | DATE: 4-27-83 | APPROVED BY: SJM | CHECKED BY: DT | DRAWN BY: BS | FIGURE NUMBER 7000 | L

WE CAN ASSUME NO RESPONSIBILITY FOR USE OF SUPERSEDED OR VOID DATA
DIMENSIONS ARE SUBJECT TO MANUFACTURERS TOLERANCE AND CHANGE WITHOUT NOTICE

WARNING: Cancer and Reproductive Harm - www.P65Warnings.ca.gov